FUJINON

Control Accessories for Broadcast ENG/EFP barrel type lenses

Digi Power

▶ MS-11D (Digital)

Manual focus

Manual zoom

For RM/ZM type lens

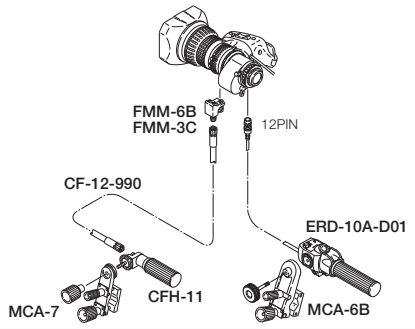

▶ SS-11D (Digital)

Servo focus

Servo zoom

For RM/ZM type lens

Some DIGI POWER functions of EPD-4A-E2/E12 may be limited.

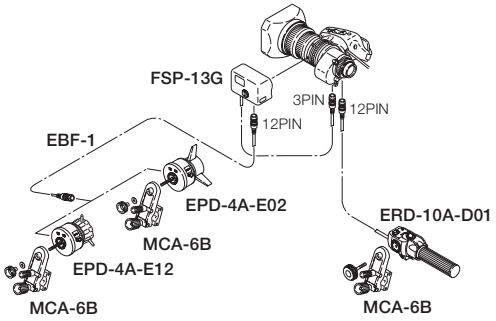

▶ SS-13D (Digital)

Servo focus

Servo zoom

For RD/ZD type lens

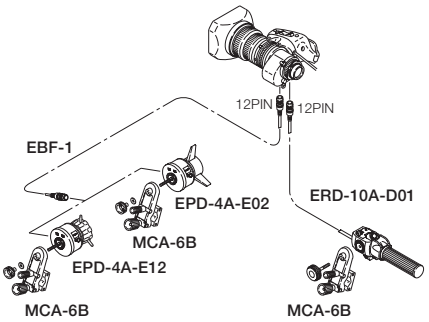

▶ SS-14S (Digital) w/shot box

Servo focus

Servo zoom

w/Shot box

For RD/ZD type lens

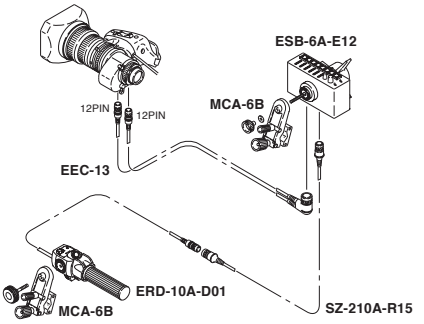

A variety of conversion and extension cables are available. For details, please ask our sales office.

MM: Manual focus / Manual zoom
MS: Manual focus / Servo zoom
SS: Servo focus / Servo zoom

Specifications are subject to change without notice. 01/12

FUJIFILM Europe GmbH

Heesenstr. 31, 40549 Düsseldorf, Germany
Tel.: +49 211-50 89 0, Fax: +49 211-50 89 344
www.fujifilm.eu

FUJIFILM